CAS 25

MOTOKOV

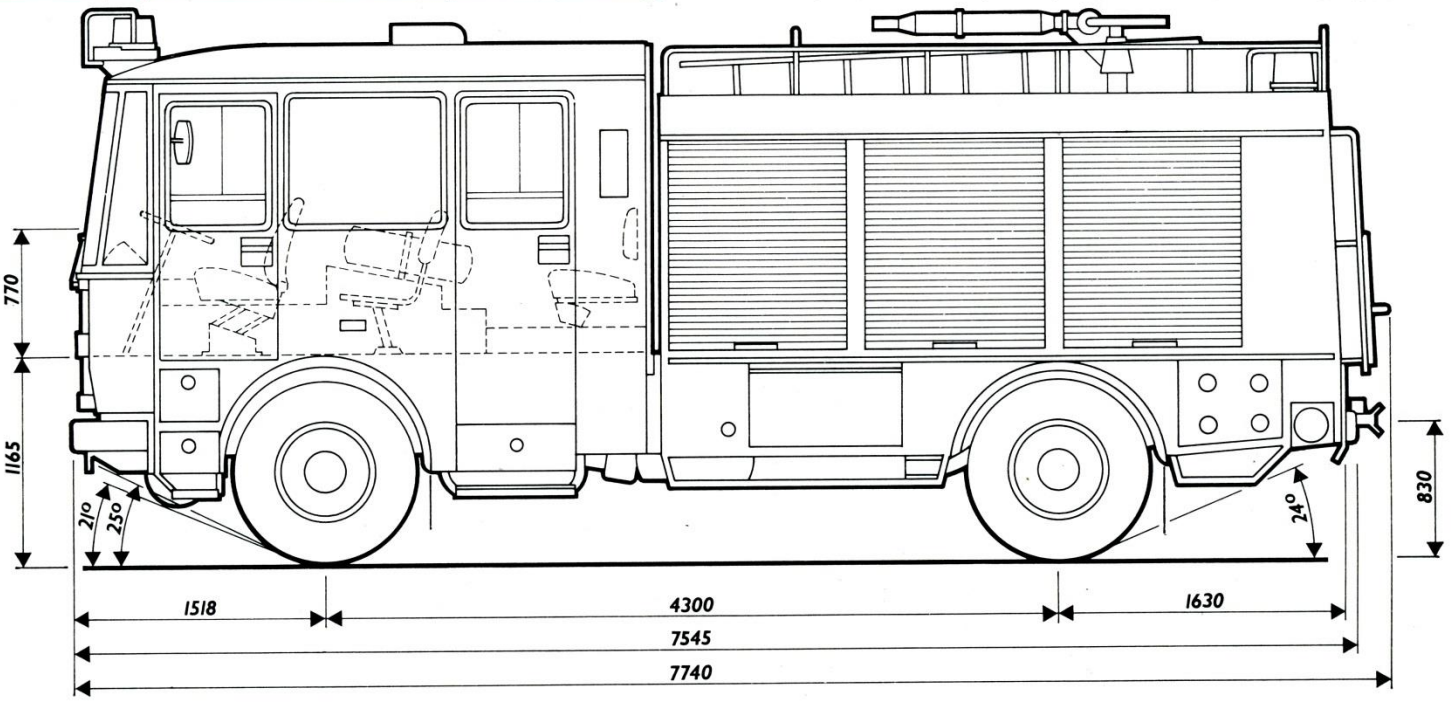

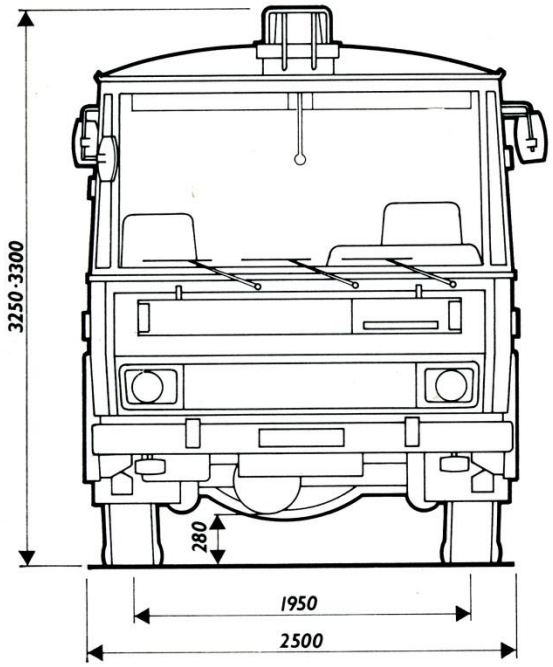
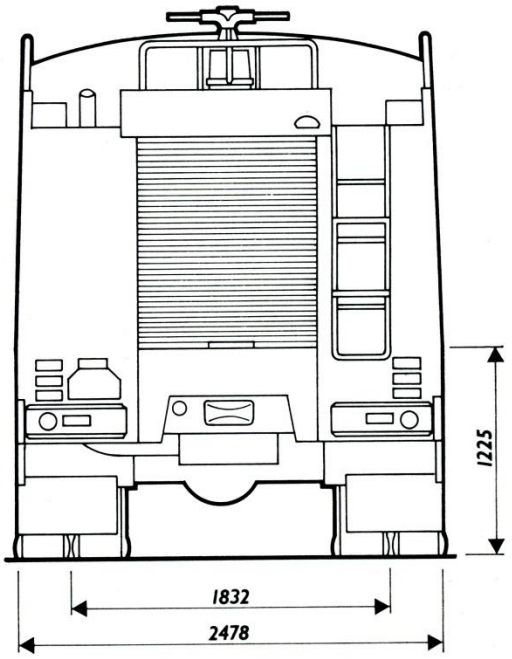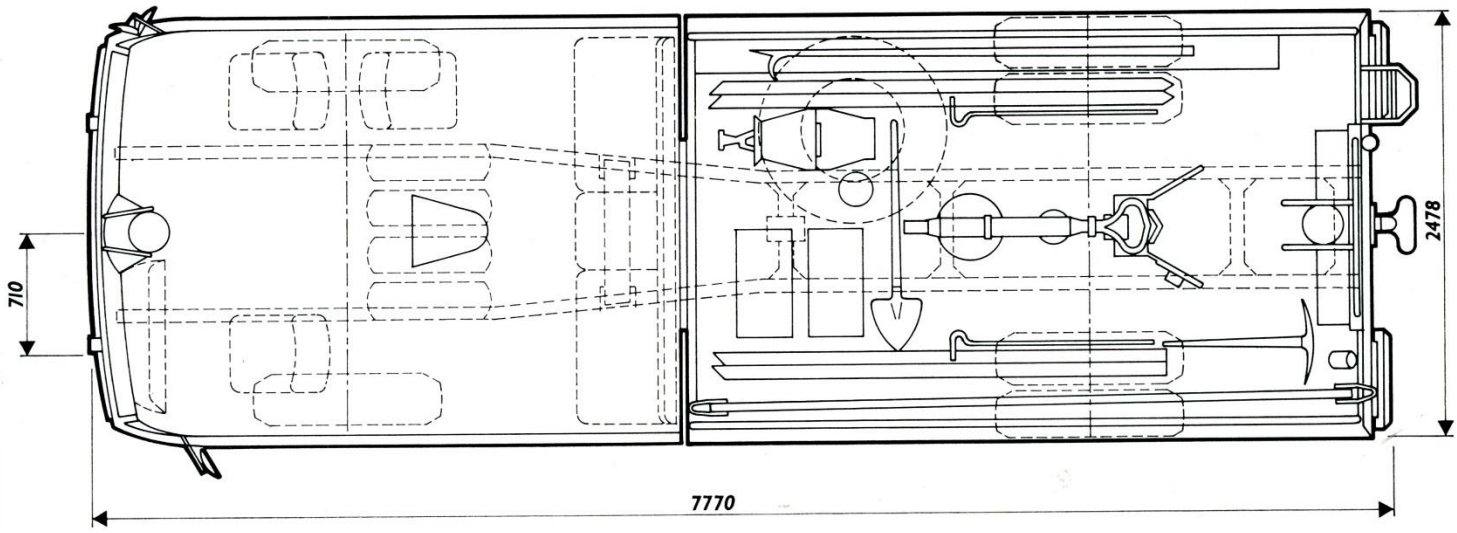
EXPORT
MOTOKOV
PRAHA
CZECHOSLOVAKIA